FIRST ANGLE PROJECTION ALL DIMENSIONS ARE IN mm.

COPYRIGHT AND CONFIDENTIAL
THE INFORMATION ON THIS DOCUMENT IS THE PROPERTY OF BHARAT HEAVY ELECTRICALS LTD. IT MUST NOT BE USED DIRECTLY IN ANY WAY DETRIMENTAL TO THE INTERST OF THE COMPANY.

DRG.NO. 3 721 10 12 455 (SHT.NO. 04 OF 04)

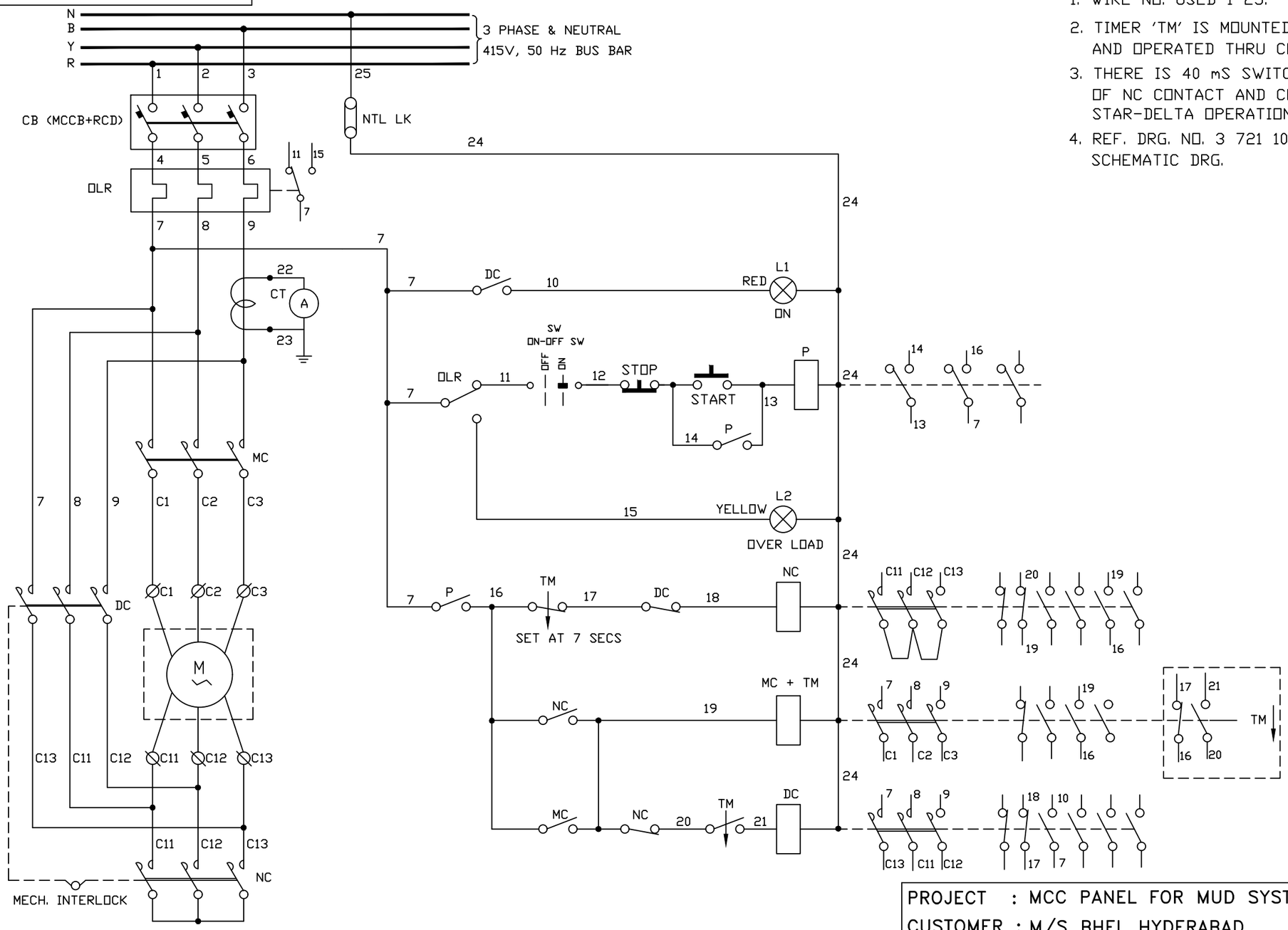

NOTES:-

1. WIRE NO. USED 1-25.
2. TIMER 'TM' IS MOUNTED ON THE MC CONTACTOR AND OPERATED THRU CONTACTOR PLUNGER.
3. THERE IS 40 mS SWITCHING TIME BETWEEN OPENING OF NC CONTACT AND CLOSING OF NO CONTACT FOR STAR-DELTA OPERATION.
4. REF. DRG. NO. 3 721 10 12454 FOR SINGLE LINE SCHEMATIC DRG.

PROJECT : MCC PANEL FOR MUD SYSTEM TEST FACILITY
CUSTOMER : M/S BHEL HYDERABAD

REF DRG. NO.

SIGN.& DATE

INVENTORY NO.

REV	DATE	ALTERED	REV	DATE	ALTERED
		CHECKED			CHKD. / APPD.

	NAME	SIGN.	DATE
DRAWN	MDS		11.6.20
CHECKED	PKS		11.6.20
APPROVED	RV		11.6.20

DISTRIBUTION OF PRINTS		
DC	1	
RFM	3	

DEPT.	CODE
CEE	407

BHARAT HEAVY ELECTRICALS LIMITED
BHOPAL

TITLE: SCHEMATIC FOR 100HP STAR DELTA STARTERS

CARD CODE	REV. NO.
	00
NO.OF SHEETS	04
SHEET NO.	04

W.O.NO. | DRG. NO. 3 721 10 12455

REF/DO/01